(3) Zwei Spannungsquellen

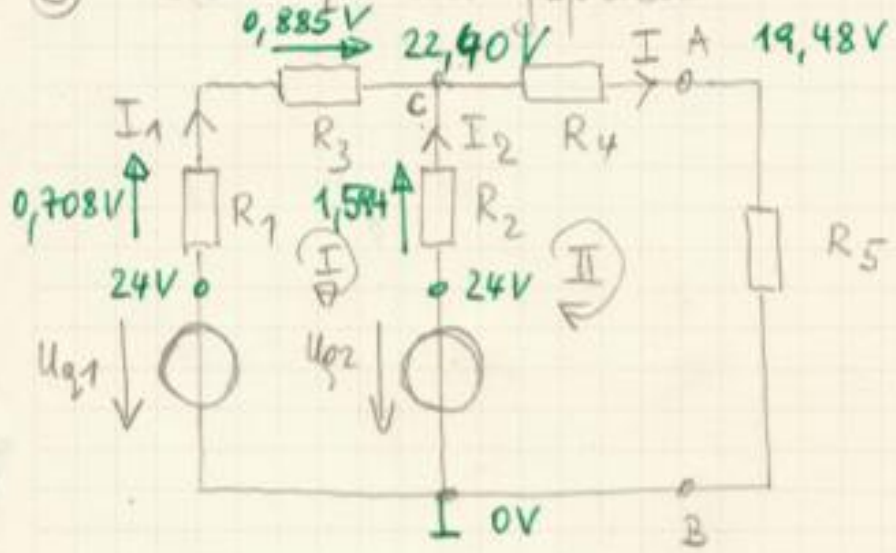


$R_5 = 10\,\Omega$
$U_{q1} = 24\,V$
$U_{q2} = 24\,V$
$R_1 = 2\,\Omega$
$R_2 = 1\,\Omega$
$R_3 = 2{,}5\,\Omega$
$R_4 = 1{,}5\,\Omega$

Knoten C: $I_1 + I_2 - I = 0$
Masche I: $(R_1+R_3)\,I_1 - R_2 I_2 = U_{q1} - U_{q2}$
Masche II: $R_2 I_2 + (R_4+R_5)\,I = U_{q2}$

| | $I_1$ | $I_2$ | $I$ | r.S. | |
|---|---|---|---|---|---|
| $I = 1{,}948\,A$ | 1 | 1 | −1 | 0 | $\cdot -4{,}5$ |
| $I_2 = 1{,}594\,A$ | 4,5 | −1 | 0 | 0 | |
| $I_1 = 0{,}354\,A$ | 0 | 1 | 11,5 | 24 | |
| händische Lösung | 1 | 1 | −1 | 0 | |
| | 0 | −5,5 | 4,5 | 0 | |
| | 0 | 1,0 | 11,5 | 24 | $\cdot 5{,}5$ |
| $I_1 = 1{,}948 - 1{,}594$ ⇐3 | 1 | 1 | −1 | 0 | |
| $I_2 = 24 - 11{,}5 \cdot 1{,}948$ ⇐2 | 0 | 1 | 11,5 | 24 | |
| $I = \frac{132}{67{,}75} = 1{,}948$ ⇐1 | 0 | 0 | 67,75 | 132 | |