1 - Vorlesung

Lösung des Gleichungssystems : A)

① 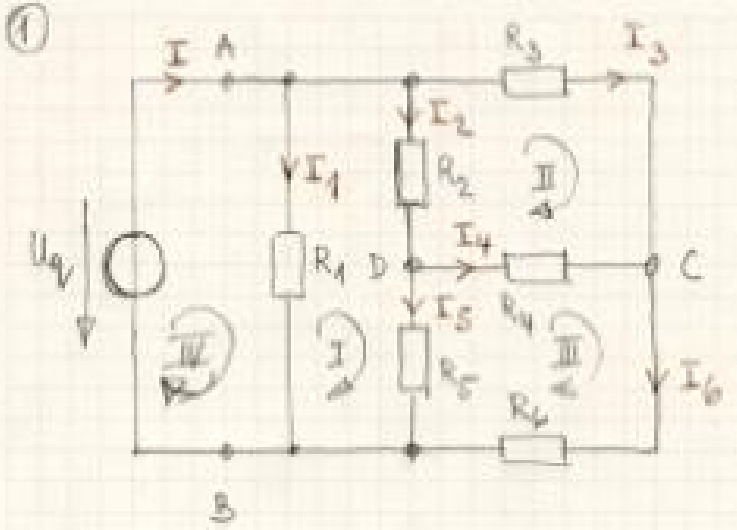

$U_q = 230\ V$
$R_1 = 40\ \Omega$
$R_2 = 60\ \Omega$
$R_3 = 60\ \Omega$
$R_4 = 60\ \Omega$
$R_5 = 40\ \Omega$
$R_6 = 40\ \Omega$

Knoten A : $I - I_1 - I_2 - I_3 = 0$
Knoten D : $I_2 - I_4 - I_5 = 0$
Knoten C : $I_4 + I_3 - I_6 = 0$
Masche I : $R_2 I_2 + R_5 \cdot I_5 - R_1 I_1 = 0$
Masche II : $R_3 I_3 - R_4 I_4 - R_2 I_2 = 0$
Masche III : $R_4 I_4 + R_6 I_6 - R_5 I_5 = 0$
Masche IV : $R_1 \cdot I_1 = U_q$

	I_1	I_2	I_3	I_4	I_5	I_6	I	r.S.
A	-1	-1	-1	0	0	0	1	0
D	0	1	0	-1	-1	0	0	0
C	0	0	1	1	0	-1	0	0
I	$-R_1$	R_2	0	0	R_5	0	0	0
II	0	$-R_2$	R_3	$-R_4$	0	0	0	0
III	0	0	0	R_4	$-R_5$	R_6	0	0
IV	R_1	0	0	0	0	0	0	U_q

$I_1 = 5,750\ A$
$I_2 = 2,300\ A$
$I_3 = 2,300\ A$
$I_4 = 0\ A$
$I_5 = 2,300\ A$
$I_6 = 2,300\ A$
$I = 10,350\ A$

b) $R_{AB} = \frac{U_q}{I} = \frac{230\ V}{10,35\ A}$

$R_{AB} = 22,22\ \Omega$

